GLIDE

The simple atmospheric appearance of the luminaries with smooth lines integration, all show low luxury of the king temperament.
It can good to suit for only the bright shop lighting but also the noble club, The subtle design elements of the front cover complement the aesthetic design of the whole fixture. 360° rotation allows you to use the function to the extreme.

Available Accessories

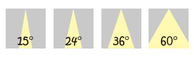

CE RoHS

JC LIGHTING 嘉成照明

GLIDE

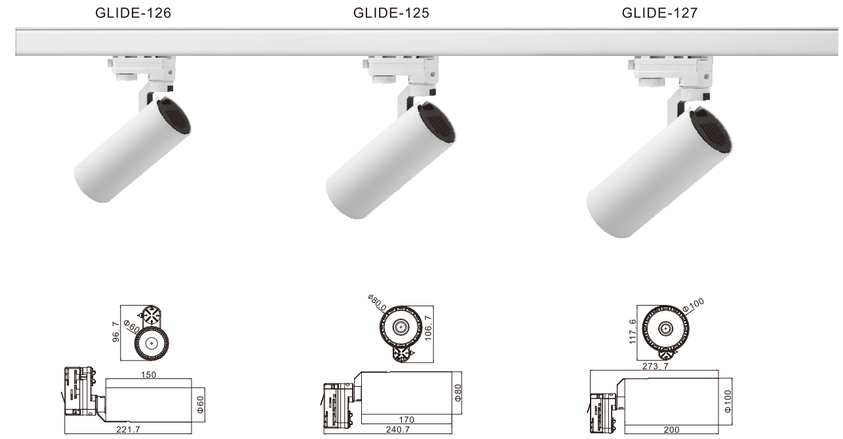

Product code	Order Code	Lumen	Power	Beam Angle	CCT	CRI
GLIDE-126	3359	1500lm	15W	15	2700/3000/4000/5000	80/90/95
	3360	1500lm	15W	24	2700/3000/4000/5000	80/90/95
	3361	1500lm	15W	36	2700/3000/4000/5000	80/90/95
	3440	1500lm	15W	50	2700/3000/4000/5000	80/90/95
GLIDE-125	3365	3000lm	28W	15	2700/3000/4000/5000	80/90/95
	3366	3000lm	28W	24	2700/3000/4000/5000	80/90/95
	3367	3000lm	28W	36	2700/3000/4000/5000	80/90/95
	3441	3000lm	28W	60	2700/3000/4000/5000	80/90/95
GLIDE-127	3368	3500LM	35W	15	2700/3000/4000/5000	80/90/95
	3369	3500LM	35W	24	2700/3000/4000/5000	80/90/95
	3380	3500LM	35W	36	2700/3000/4000/5000	80/90/95
	3442	3500LM	35W	60	2700/3000/4000/5000	80/90/95

嘉成照明电器有限公司
Jia Cheng Lighting & Electrical Apparatus Co., Ltd.
Add: Yongxing Industrial Village,Yongxing Industrial Roard, Xiaolan , Zhongshan City, Guangdong Province,china
Tel: +86-760-22253203 Fax: +86-760-22253890 / 22835283
E-mail: export@jclighting.net www. chinajclighting. com